AC POWER TRANSFER SWITCH

PMTS-30 and PMTS-50

Transfer Switch for 120 or 240Vac 30 and 50 Amps

⚠ SAFETY ALERT

FOR YOUR SAFETY, READ ALL INSTRUCTIONS BEFORE INSTALLATION AND OPERATION.

INSTALLER: Provide these instructions to the end user or consumer.
CONSUMER: Keep these instructions for future reference.

NOTICE: Products are not to be used nor are warranted in aerospace, medical or lifesafety applications.

⚠ WARNING –Avoid Possible Injury or Death

120 or 240 VAC may present. Risk of electric shock: This device switches 120Vac or 240Vac and has more than one input. All inputs must be disconnected before any work is done on this product.

⚠ WARNING –Avoid Personal Injury or Product Damage

DO NOT mount/install unit in compartments designed for storage of batteries of flammable liquids. The PMTS-30 and PMTS-50 are not ignition protected. They employ components that tend to produce arcs or sparks. To prevent fire or explosion, NEVER install electrical devices in compartments where batteries or flammable materials (such as gasoline or LP gas) are stored or used.

The PMTS-30 and PMTS-50 are for a 30 and 50 Amp AC service respectively. It can be mounted in any position, leaving enough room for the shoreline and generator wire connections. To minimize voltage drop across the wire, install the PMTS-30 or PMTS-50 as close to the generator and shore power cord entrance as possible.

⚠ WARNING

Do not install close to appliances that are a source of heat or water such as water heaters, furnaces or under refrigerators. They are not designed for mounting in wet locations. They must be protected from direct contact with water and debris.

⚠ WARNING

Do not mount in zero a clearance compartment. Overheating may result. Do not drill through the metal housing. Debris and metal shavings can interfere with the operation of the transfer switch. For wiring, use the existing knockouts.

⚠ WARNING-MORE THAN ONE LIVE CIRCUIT-SEE DIAGRAM
The PMTS-30 and PMTS-50 must be installed by a qualified electrician.

Operation:

When shore power is available, it is automatically connected to the Control Panel. To operate from an onboard generator, start the generator and after 20 to 30 seconds power will automatically transfer from shore power to generator. The time delay of 20 to 30 seconds allows the generator voltage to stabilize. When the Generator stops, power automatically and immediately transfers back to shore power.

Wiring instructions:

The PMTS-30 is rated for use on a circuit capable of momentarily delivering not more than:
3000 rms symmetrical Amps. 240 V AC Max operating voltage

The PMTS-50 is rated for use on a circuit capable of momentarily delivering not more than:
5000 rms symmetrical Amps. 240 V AC Max operating voltage

When L1 and L2 (rated for 35 A each) are connected in phase, generator-neutral capability will increase up to 70 A

All field wires used have to be rated for at least 105° C.
For 6 to 14 AWG wires, use 13 inch-pound torque.
Ground terminal bar is suitable for 6-14 AWG conductors using 35 inch-pounds torque. All grounds are connected inside of the PMTS-30 and PMTS-50.

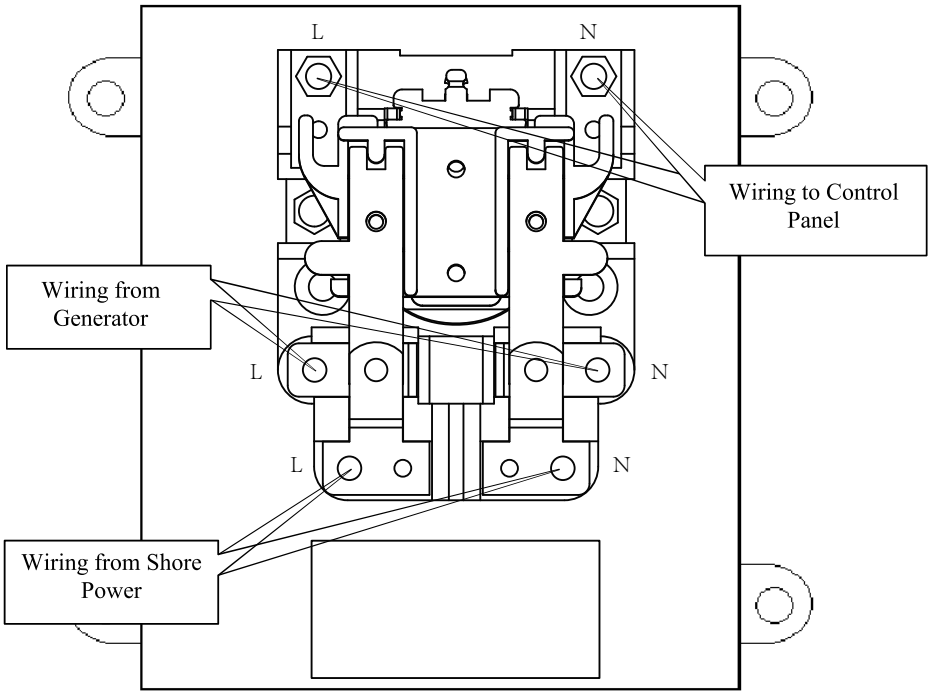

PMTS-30

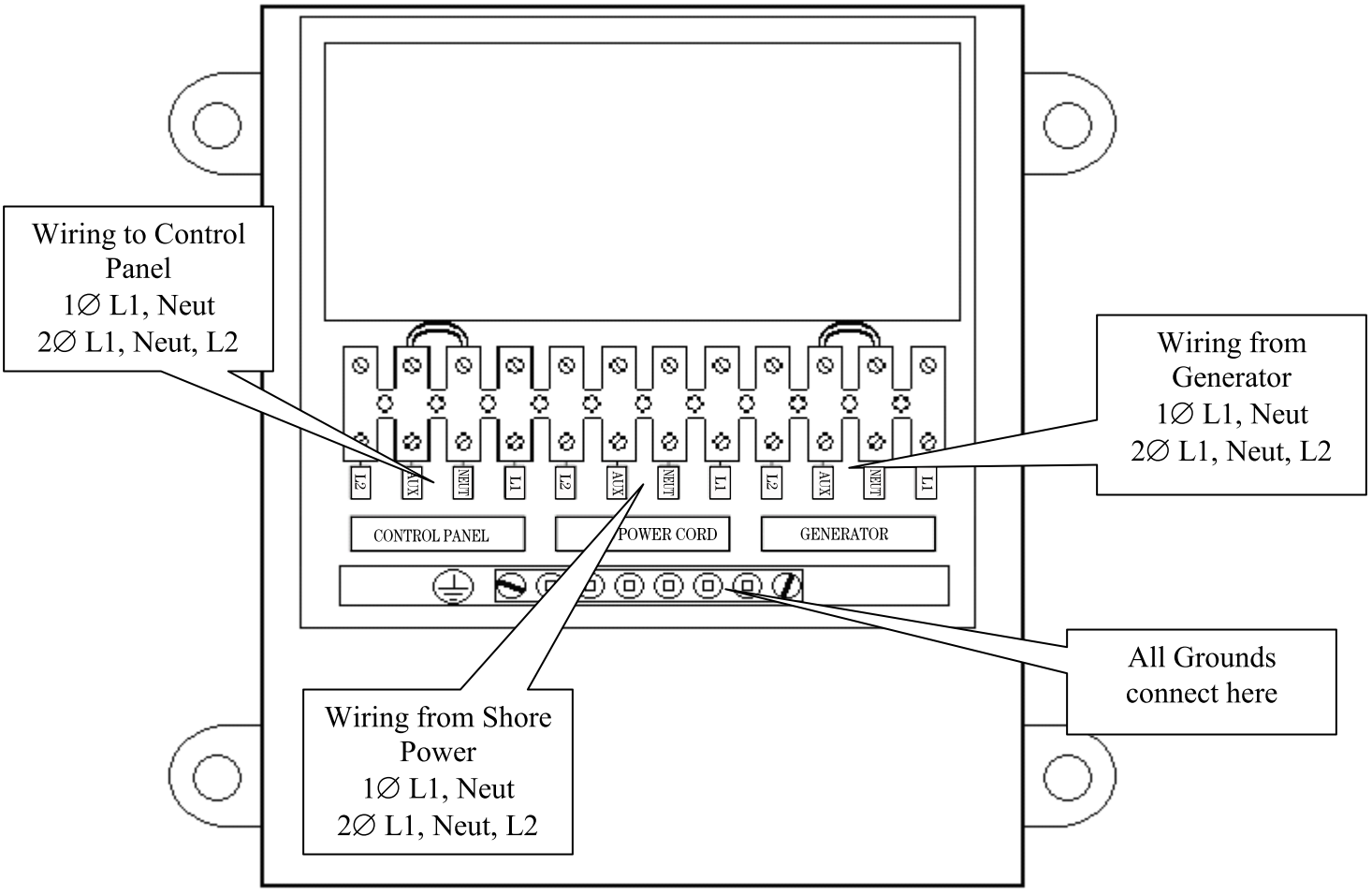

PMTS-50