DANGER: Avoid back feeding the inverter AC Outputs from any external AC Power Source to either Neutral or Hot or both. Do not connect the Neutral of unit AC Outputs to the Neutral of the AC Power Source

GFCI Receptacle AC Output

N = Neutral
L = Hot (Line)
G = GND = Common AC Ground

Hardwired AC Outputs

AC OUTPUT Port 2 (with GFCI protection) ①
Pass-Through Mode:15/20Amax , Battery Mode:8.3/16.6A max

AC OUTPUT Port 1 (without GFCI protection) ②
Pass-Through Mode:30A max, Battery Mode:8.3/16.6A max

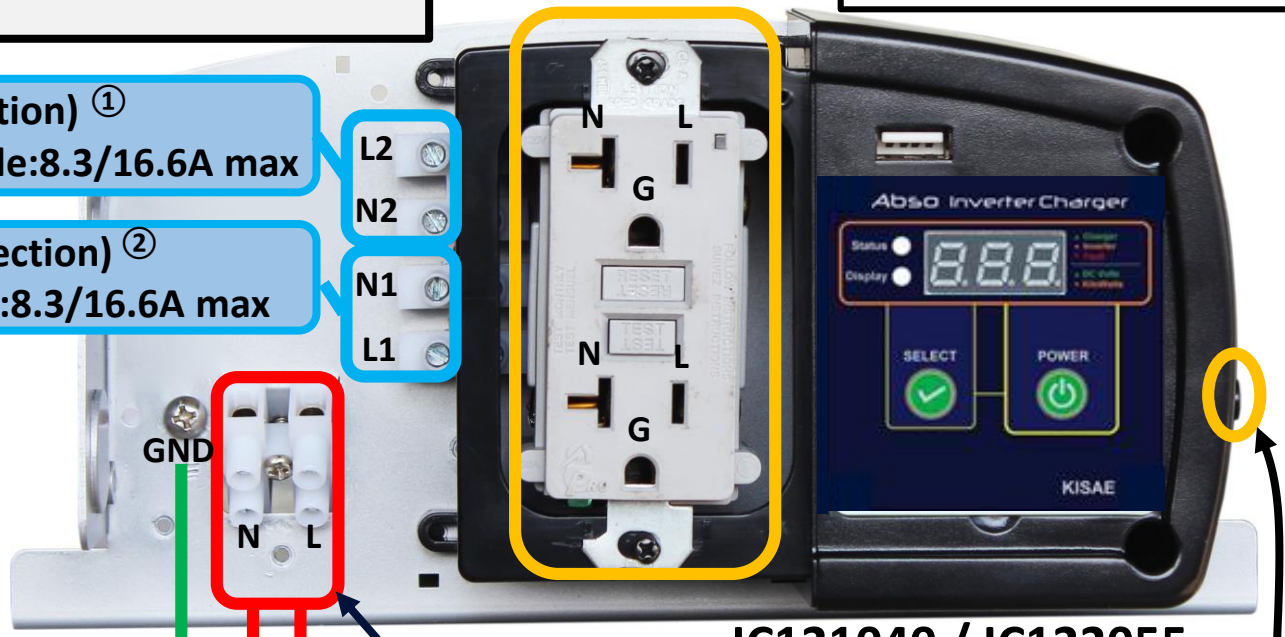

① AC OUTPUT Port 2 is connected to the load side (downstream) of the IC121040/IC122055 15/20A GFCI receptacle respectively. It is under the influence of the receptacle "Test" and "Reset" buttons.

② AC OUTPUT Port 1 is connected directly to the built-in 30A (20A for the IC121040) transfer switch.

- In Pass-Through (bypass) Mode the maximum current is limited by the branch breaker that feeds the AC Input Port (20A/30A max. For the IC121040/IC122055 respectively). It is the sum of all the currents coming out from all the AC Outputs plus the AC Input current draws by the built in battery charger when charging the battery.
- In Battery (inverter) Mode, the sum of all currents coming out from all the AC Outputs cannot exceed 8.3/ 16.6A continuous for the IC121040/IC122055 respectively.

AC Input Port

IC121040 / IC122055

Common AC Ground (chassis) for both: AC-Input and AC-Output

Copper wires gauge according to the breaker*. Use awg # 10/12/14 min. for 30/20/15A respectively

Supplementary Breaker for the GFCI Outlet & AC OUTPUT Port 2

***An External Branch Breaker is required. Maximum Rating 20A/30A for IC121040/IC122055 respectively**

To AC Power Source (120V, 60Hz Only)

DANGER: Avoid feeding the unit with its own AC-Outputs (feedback).

WARNING: This information is for reference purposes only. Always make sure to meet your local electric code. For proper installation ask a qualified electrician

DO's and DON'Ts when connecting to an existing AC wiring system

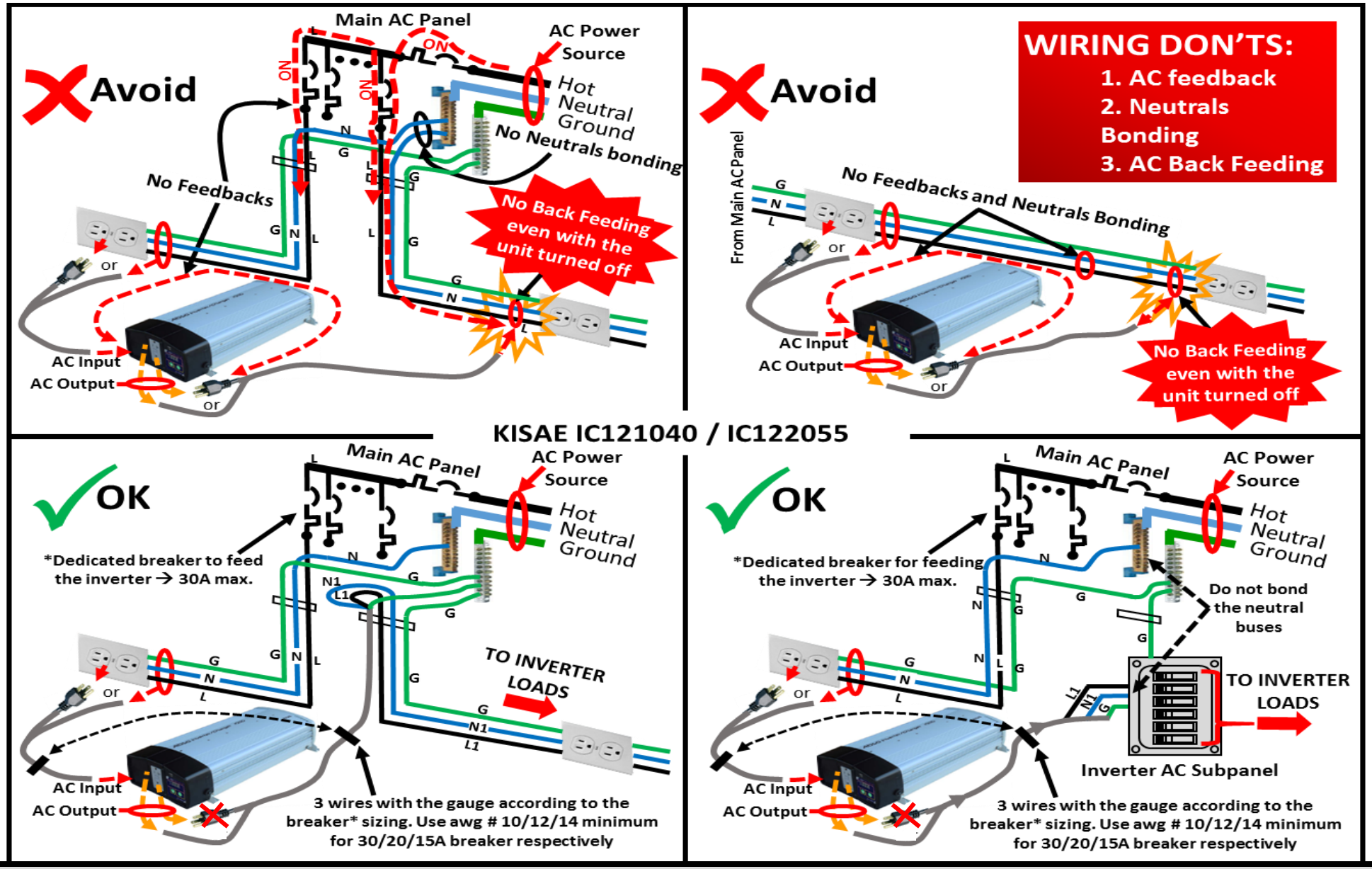

WARNING: This information is for reference purposes only. Always make sure to meet your local electric code. For proper installation ask a qualified electrician.

KISAE IC121040①/IC122055② Typical AC and DC Input Wiring for Marine Applications

This diagram does not illustrate a complete system. Refer to the corresponding ABYC standards (A-31 and E-11)

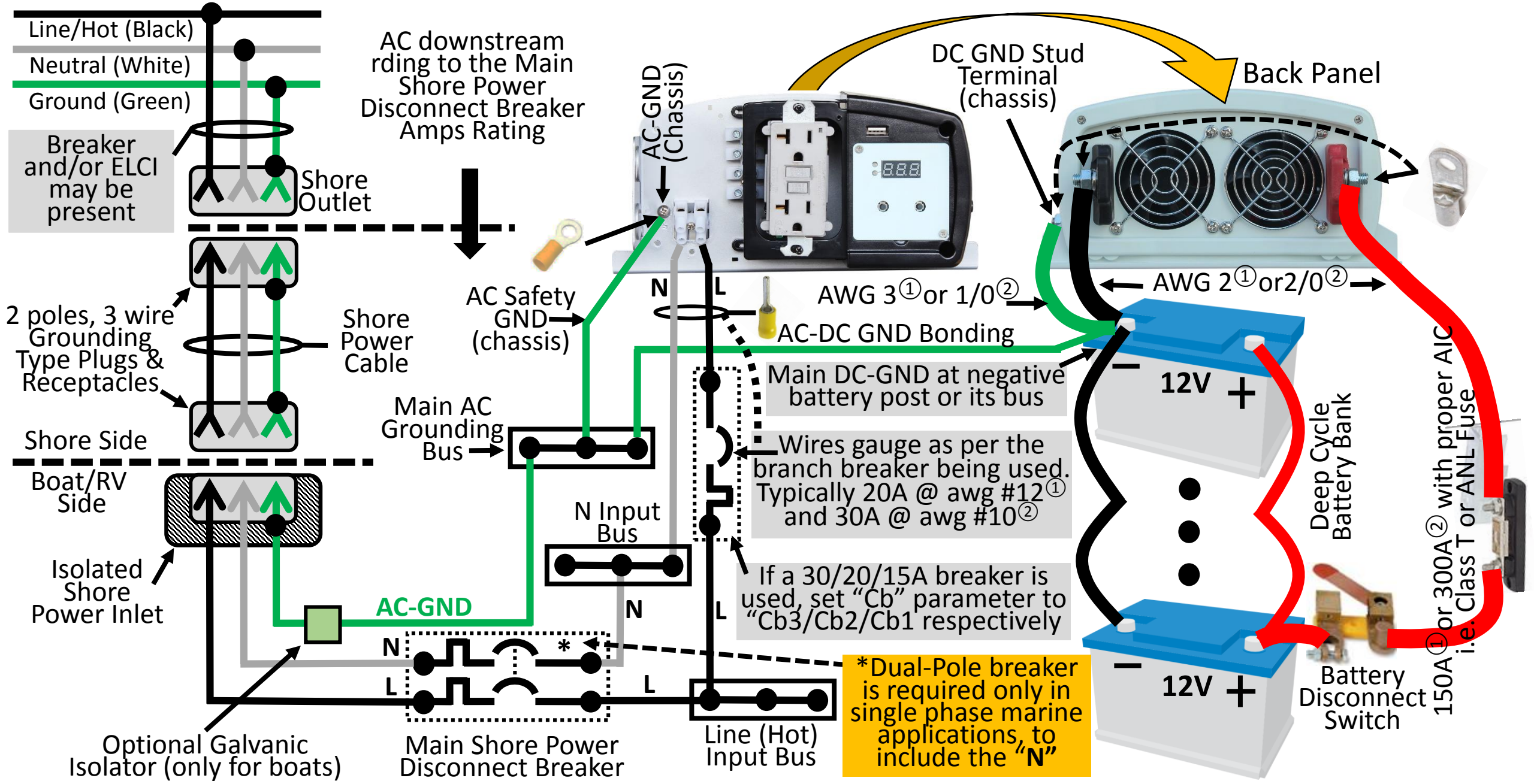

AC Output Neutral Ground (chassis) Bonding:

When the KISAE Inverter/Charger is running in Backup (=battery = inverter) Mode, the internal neutral-to-ground bonding system is enabled. The unit acts as an AC source and will automatically connect the AC Output Neutral (N) circuit to the AC safety ground (GND).
Contrarily, when the unit is running in Pass-Through (Bypass) Mode (so the AC output I being supplied by the utility/shore or gas generator through the AC Input terminals) the internal neutral-to-ground bonding system is disabled. In this case, the unit acts as a passive power bar and not as an AC source. This mechanism is a mandatory requirement of the standard bodies (NEC, CSA, Intertek, etc.)

Because of that neutral bonding mechanism, **DO NOT connect the Neutral of the unit AC Outputs to other Neutrals of external AC Power Sources.** This is because there could be a little voltage between the "N" of the shore/facility power and ground for several reasons (i.e. phase imbalance and/or voltage drop along the neutral wire). If you connect them through the unit when it is in backup mode, the current to equalize the possible electric potential difference in between the N and GND will pass through the internal neutral-to-ground bonding of the KISAE unit. Even though that voltage could be very low (perhaps less than 1 volt) the currents can be proportionally much higher and some internal component in the way of the bonding could fail (i.e. some of the transfer switch relay contacts).

It is highly recommended to either plug the loads directly to the unit GFCI outlet or use a **dedicated** distribution panel for the loads connected to the inverter. On this dedicated distribution panel, DO NOT connect the neutral to ground or bond the neutral to other neutrals coming from different distribution panels. See more on the "Do's and Don'ts when connecting to an existing AC wiring system". The following **BASIC SCHEMATIC** shows how the Neutral and GND are bonded inside and how it is connected to the internal transfer switch.

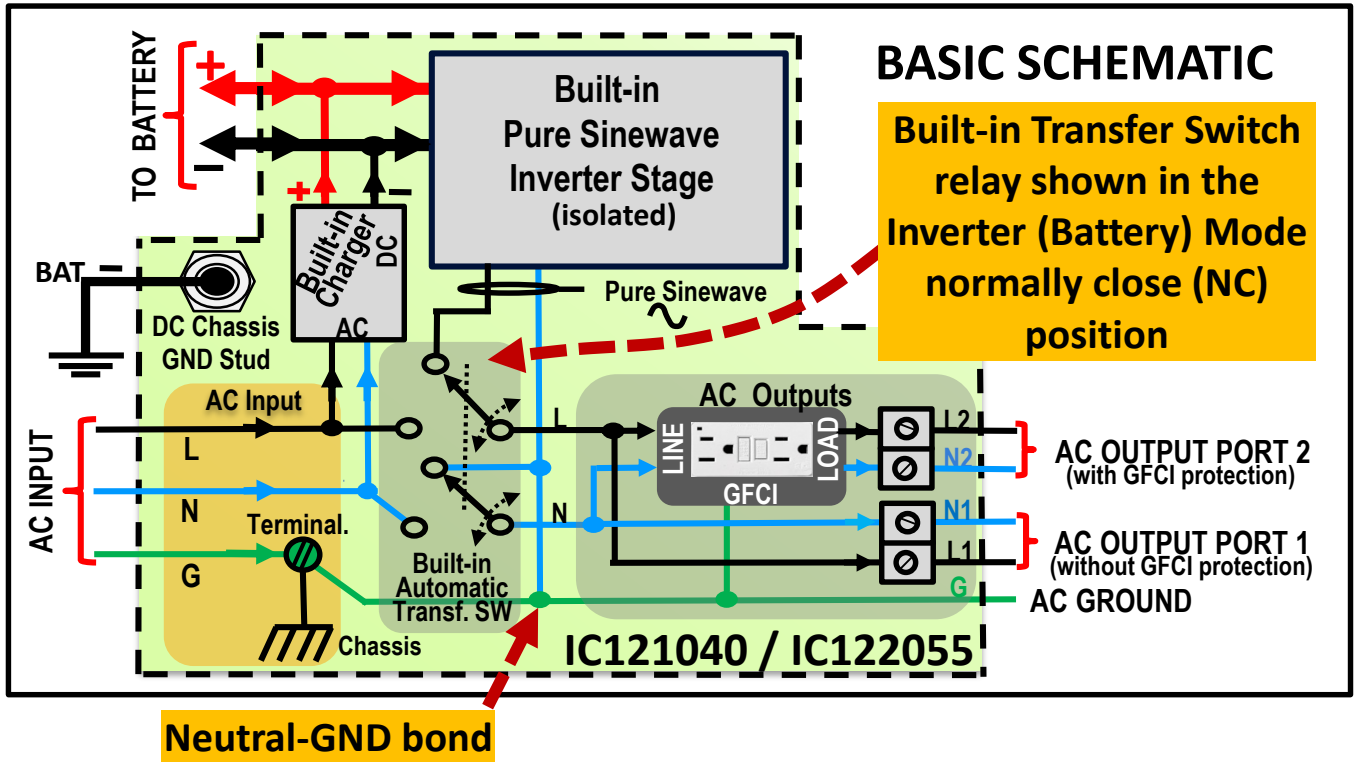

Typical RV Electrical System (This diagram does not illustrate a complete system)

① Isolator is required for recharging 2 or more separate battery banks with a common alternator preventing the starting battery to end up drained by the other bank. There are smart isolators with more wiring and features like: regulation, priority, current pass-through, under-voltage shutdown and/or 0V drop The lacking of an isolator can be compensated partially keeping the batteries isolated at all or connecting them in parallel and using the inverter highest under-voltage shutdown "SdH" setting

② Fuse amps rating depends on the alternator maximum one. Pass-through type isolators may require higher rating

③ Plug & receptacle shown as per RV 30A. There are others for 30A and 50A-240V-2-hots for RV and Marine applications. An ELCI** ground fault protection device may be required* within 10 feet of the shore power inlet

④ Neutral bars isolated from the common GND and between AC Main panel and Inverter subpanel. Do not bond them

⑤ Typically AC Port 1 is used for maximum 20A/30A rating. Alternatively AC Port 2 with GFCI protection can be used instead, rated to 15/20A max for IC121040 / IC122055 respectively

⑥ The Neutral has to be included using a 2/3 pole transfer SW for 120V / 240V-2-Hots respectively, coming from the gas generator or shore power

⑦ For marine applications* **with single phase shore power,** include a pole for the Neutral to protect against possible Neutral-Hot reversal from the shore power.with a minimum amps rating as the sum of the one in the inverter breaker in point ⑧ plus the max. current to the non-inverter loads, and no more than the amps rating of the transfer switch at ⑥

⑧ Single pole 20A/30A max. for the IC121040/IC122055 respectively. For servicing purposes turn the main breaker ⑦ off just in case the Neutral and Hot are reversed

⑨ Min. gauge as per point ⑧, typically for 20A/30A, awg #12/#10 min. (copper) for IC121040/IC122055 respectively

⑩ Minimum gauge as per the max. current coming from the transfer SW in ⑥ and so from ③ or the gas generator

⑪ DC and AC grounds bonding to provide a path to shore GND for any stray AC current in the DC-GND, reinforcing the one between points A and B through the chassis. The gauge should be no thinner than the GND wire coming from ③

⑫ The wire of the DC chassis GND should* be sized not less than one size smaller than the wire carrying the DC current at point ⑭. It means no thinner than awg 3 / 1/0 (copper) for IC121040 / IC122055 respectively. This is to avoid risk of fire in case of a DC short circuit event before the big fuse ⑬ blows up. The use of this AC to DC ground bonding wire in marine applications* could produce galvanic corrosion if the boat is not adequately protected with galvanic AC isolators (either diodes type or transformers)

⑬ Use either a DC fuse or DC breaker rated at 150 / 300A for the IC121040 / IC122055 respectively with an Ampere Interrupt Capacity (short circuit) that exceeds 2 or 3 times the total cold cranking current of the battery bank (in parallel connections the total cranking current is the sum)

⑭ Use wire gauge no thinner than awg #2 / #2/0 (copper) for IC121040 / IC122055 respectively and no longer than 5 feet long each wire.

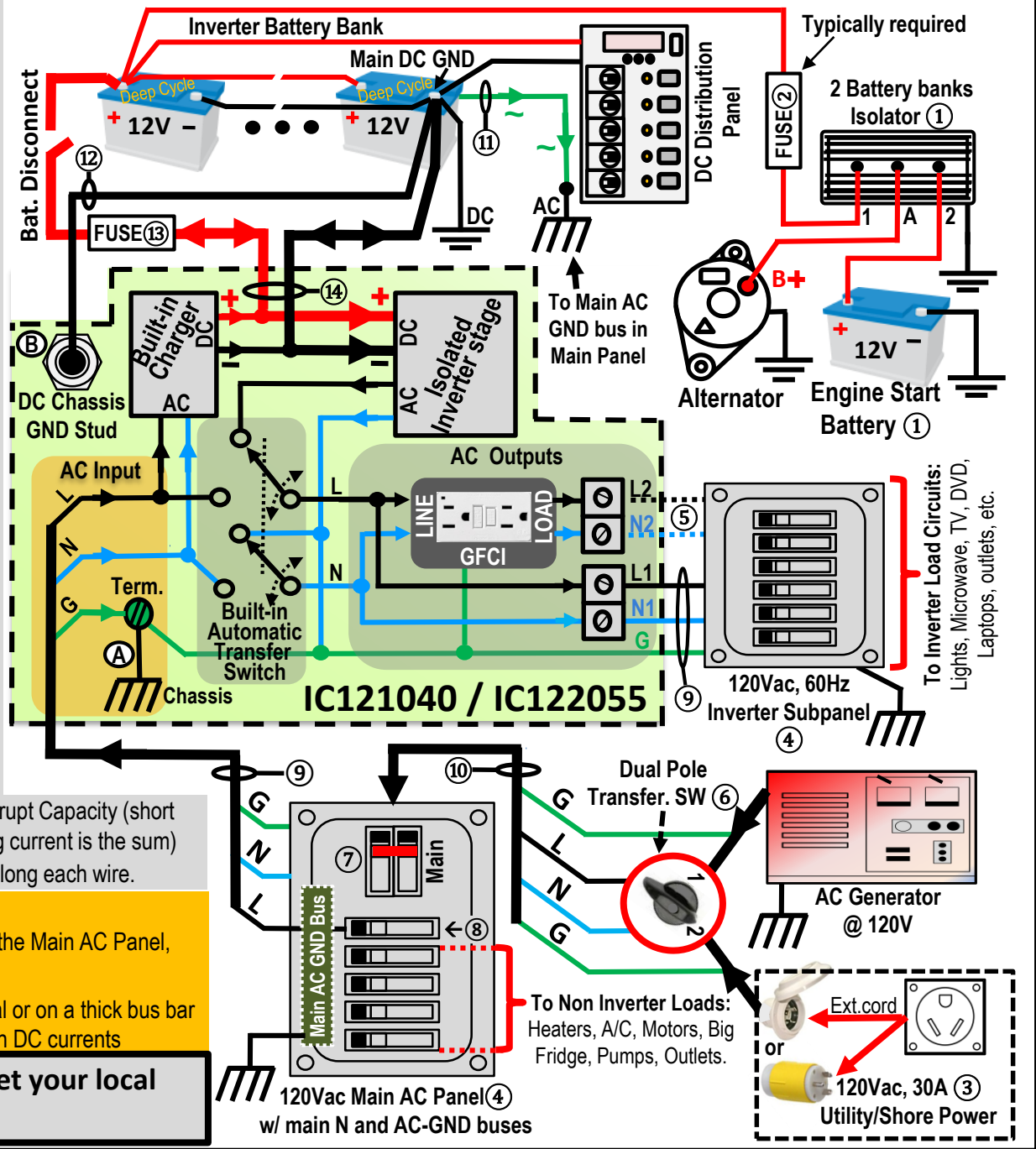

NOTES: *As per ABYC = American Boat and Yacht Council; **ELCI = Equipment Leakage Circuit Interrupter.

AC Safety Ground to be connected to all the chassis of devices with AC power. The main AC-GND bus should be in the Main AC Panel, being connected to the GND coming from the shore / pedestal power at point ③

DC Ground as the return path of the battery currents. The main DC GND should be on the negative "-" battery terminal or on a thick bus bar very close to it. The gauge of the DC-GND wire in ⑫ is thicker than the AC-GND in cable ⑨ due to the potential high DC currents

WARNING: This information is for reference purposes only. Always make sure to meet your local electric codes. For proper installation ask a qualified electrician.